DESIGN ESSENTIALS

for Injection Molding

PROTOLABS
Manufacturing. Accelerated.

Contents

As a quick reference guide, we've gathered some of our most useful tips to improve the moldability of your part design, accelerate development, and reduce production costs along the way.

Got a 3D CAD model ready to be quoted? Get free design for manufacturability (DFM) analysis and real-time pricing.

GET FREE DFM

Injection Molding Basics

Parts arrive at injection molding in different ways. Some are first prototyped through 3D printing where moldability considerations are of limited concern. Others take a more traditional machining route that allows for iterative testing in engineering-grade materials similar to that of molding. And many simply jump right to injection molding.

We've learned from experience that, before production begins, there are important design elements to consider. These may improve the moldability of the parts, and ultimately, may reduce the chance of production hiccups, cosmetic defects, and other issues.

Draft and Radii

Applying draft and radii to a part is vital to a properly designed injection-molded part. Draft helps a part release from a mold with less drag on the part's surface since the material shrinks onto the mold core. Limited draft requires an excessive amount of pressure on the ejection system that may damage parts and possibly the mold.

A good rule of thumb is to apply 1 degree of draft per 1 inch of cavity depth, but that still may not be sufficient depending on the material selected and the mold's capabilities. Protolabs uses CNC milling to manufacture the majority of the features in the mold. The result of our manufacturing process drives a unique wall thickness and draft angle based on the end mill that we are using for each feature. This is where our design for manufacturability (DFM) analysis becomes particularly helpful as our software looks at each part feature separately and compares it to our toolset. The design analysis highlights the part geometry where increased draft and thickness may be required.

Radii on the other hand isn't a necessity for injection molding, but should be applied to your part for a few reasons — eliminating sharp corners on your part will improve material flow as well as part integrity.

The resin filling the mold cavity flows better around soft corners much like the flow of a river. Rivers don't have 90 degree corners as the water flow creates inside and outside corners so it moves easily towards its final destination. Similarly, plastic resin wants to take a path of least resistance to minimize the amount of stress on the material and mold. Radii, like draft, also aid in part ejection as rounded corners reduce the chance that the part will stick in the mold causing it to warp or even break.

Wall Thickness

Controlling wall thickness during part design helps manage cosmetics, weight, and strength of your part. Parts that are too thick result in unsightly sink, warp, and internal voids (pockets of air). To avoid this, materials have recommended wall thickness guidelines— remember this is only a general rule as not all parts may have wall thicknesses at the high and low ends indicated on the chart.

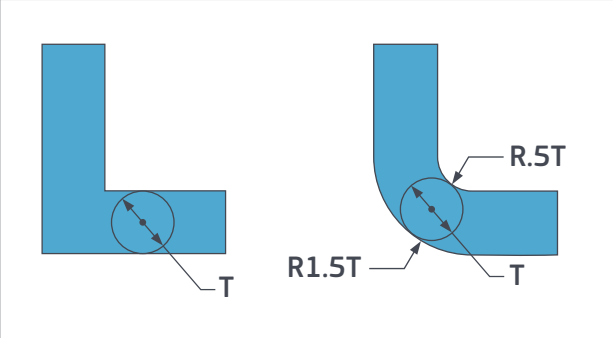

Sharp corners have high-stress concentration and plastic flow is hindered. Rounded corners have reduced-stress concentrations and plastic flow is enhanced.

MATERIAL	RECOMMENDED WALL THICKNESS
ABS	0.045 in. – 0.140 in.
Acetal	0.030 in. – 0.120 in.
Acrylic	0.025 in. – 0.150 in.
Liquid Crystal Polymer	0.030 in. – 0.120 in.
Long-fiber Reinforced Plastics	0.075 in. – 1.000 in.
Nylon	0.030 in. – 0.115 in.
Polycarbonate	0.040 in. – 0.150 in.
Polyester	0.025 in. – 0.125 in.
Polyethylene	0.030 in. – 0.200 in.
Polyphenylene sulfide	0.020 in. – 0.180 in.
Polypropylene	0.025 in. – 0.150 in.
Polystyrene	0.035 in. – 0.150 in.
Polyurethane	0.080 in. – 0.750 in.

* The table is adapted from **manufacturing.com**

Thickness recommendation

Coring Out and Ribbing

Along with employing proper wall thickness, additional considerations should be looked at to ensure a part's design integrity remains intact. One may assume that the thicker the part, the stronger the part—this is a false assumption. A properly designed part that is intended to be structural should contain ribs and supporting gussets, which increase strength and can help eliminate cosmetic defects like warp, sink, and voids.

Let's begin by coring out your thick part, which will still retain the overall height and diameter of your part without necessarily sacrificing performance. There's a good chance you'll increase the part's performance and cosmetic appearance, too.

Next, we'll focus on the design of the support ribs. The ideal way to design ribs is by using a rib-to-wall thickness ratio of 40 to 60 percent the thickness of adjacent surfaces. The main body of the part should be designed thick enough so any adjacent rib extruded from it is about half of the thickness. This helps you avoid thick sections that may cool at different rates than the thin sections. It also helps in reducing sink and stresses that can create warp in your part.

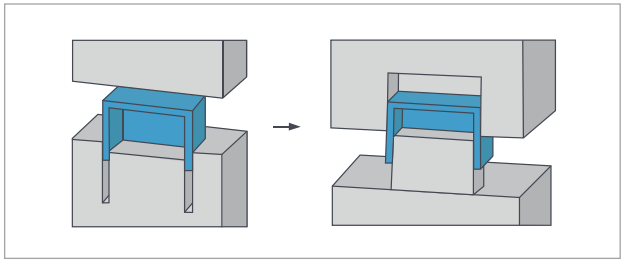

Deep-Rib Approach: Box designed with walls as rubs. Higher cost to machine and polish cavity. Core-Cavity Approach: Box designed through core-cavity method. Can get to features with bigger, faster cutter. Easier and faster to polish.

Ramps and gussets are yet another design element to strengthen and cosmetically improve your part. Again, plastic prefers smooth transitions between geometries and a small ramp helps the material flow between levels. Gussets help supporting walls or features while reducing molding stresses.

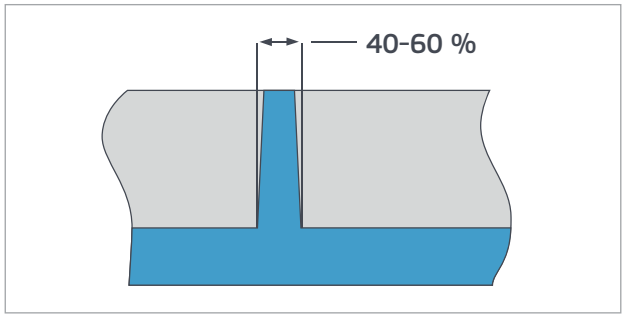

To prevent sink, the thickness of the rib should be about half of the thickness of the wall.

Core-Cavity

The core and cavity are often referenced as the A and B sides or top and bottom halves of a mold. A core-cavity approach to part design can save manufacturing time and money and improve the overall part cosmetics.

Let's say you're designing a simple box. When draft is applied to the outside and inside surfaces in the same mold half, you create a very deep rib that is difficult to manufacture and increases tooling costs. It also increases the chance of mold damage due to difficult ejection and short shots due to lack of mold venting in the deep rib.

You can minimize all of these concerns through a core-cavity approach. This design technique requires the outside and inside walls to be drafted so they are parallel to one another. This method keeps a consistent wall thickness, maintains the part integrity, improves the strength and moldability, and decreases the overall manufacturing cost.

Undercuts

Rapid injection molding requires that your part design should be as simple as possible, right? This is another false assumption as we support complex part designs that require undercuts, through holes, and other features.

External undercuts are the easiest and most cost effective as we accommodate through pin-actuated side-actions. These side-actions move in tandem with the mold when it is opened and closed while the cam rides along an angled pin. When opened, the cam is fully retracted so the part can be easily ejected without mold damage and closes again till the cam is in position to create the next part.

In cases that are not adaptable for side-actions, we can use manually removed inserts. These are mold components that are greater than a half-inch cube and are loaded by an operator into the press before it closes. After the part has been molded, the part is ejected along with the insert. The operator then takes the part and manually removes the insert and places it back into the mold for the next part.

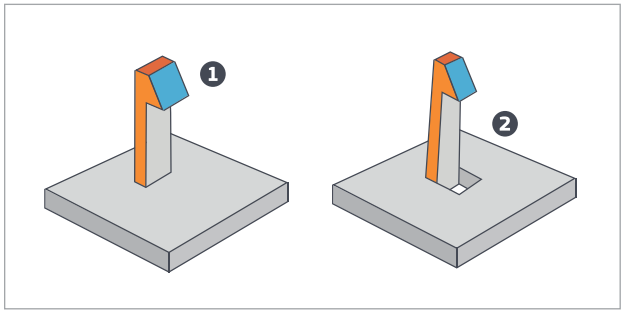

The left image illustrates a clip with undercut feature. On the right image, an access hole beneath the undercut allows the mold to protrude through the part and provide the needed latch shutoff geometry.

Gating and Ejection

Gating and ejector pins are a necessity for plastic resin to strategically enter the mold and plastic parts to effectively be ejected from the mold. We've learned from experience that there are several ways to gate or eject your part, and the locations should be considered before you are ready to proceed with tooling.

Tab gates are most commonly used as they offer a mold technician the optimal processing capabilities and have the ability to be increased in size if the process requires it. A tab gate is tapered down in size from the runner, so the smallest point is at the part's surface. This allows a freeze point between the part and runner removing the heat from the surface of the part. You want the heat removed from this surface to minimize any risk of sink in the part. After molding, the tab gate needs to be manually removed leaving a gate vestige within 0.005 in.

Sub gates are generally used by incorporating a tunnel gate into the side of the part or into an ejector pin (post gate). Both gate styles generally can decrease the size of the vestige left on the exterior of the part. Tunnel gates still enter the part externally, but are mid-way down a parts surface, so they typically leave less of a gate vestige. Post gates leave no visible vestige on the exterior of the part as the part fills through one of the ejector pins close to the perimeter of the part. The risk is the cosmetic shadow left on the opposite side of the part due to heat and part thickness. So, be cautious when using this for highly cosmetic parts that have texture or a high polish.

Hot tip gates work well as they have minimal part waste from sprue and runner systems. A hot tip is best for parts that require a balanced fill from the center to the outside edges. This minimizes any mold shift as tab gates can create an unbalanced pressure in a mold. Hot tip gates are often the most cosmetically appealing gate (about 0.050 in. diameter) and often times can be hidden in a dimple or around a logo or text.

Direct sprue gates are the least appealing and are used with specific materials that have a high glass content or where the middle of the part requires secondary machining. Direct sprue gates have a large diameter that is difficult to manually remove and often times require a fixture that is removed by milling.

13 Cosmetic Defects and How to Avoid Them

As with any manufacturing process, injection molding comes with its own set of design guidelines, and design engineers who understand these best practices will increase their chances of developing structurally sound and cosmetically appealing parts and products.

Here are some common cosmetic defects that occur on plastic injection-molded parts, and tips on how to avoid them:

Sink

As its name implies, sink appears as a dimple or shallow depression on the surface of a molded part. It's caused by thicker than normal cross sections, non-uniform part design or an improper gate placement— the doorway through which hot plastic first enters the mold cavity. Some plastics—polypropylene and acetal, for example—are very susceptible to sink, whereas fiber and glass-filled materials are less prone to sink. At Protolabs, we have **wall thickness recommendations** for each material, and advise that a workpiece minimum wall thickness be no less than 40 to 60 percent of its thickest section. Material flow within the mold should travel from thick to thin whenever possible, which might mean reorienting the mold cavity, or placing the gate in an area originally reserved for a cosmetic surface.

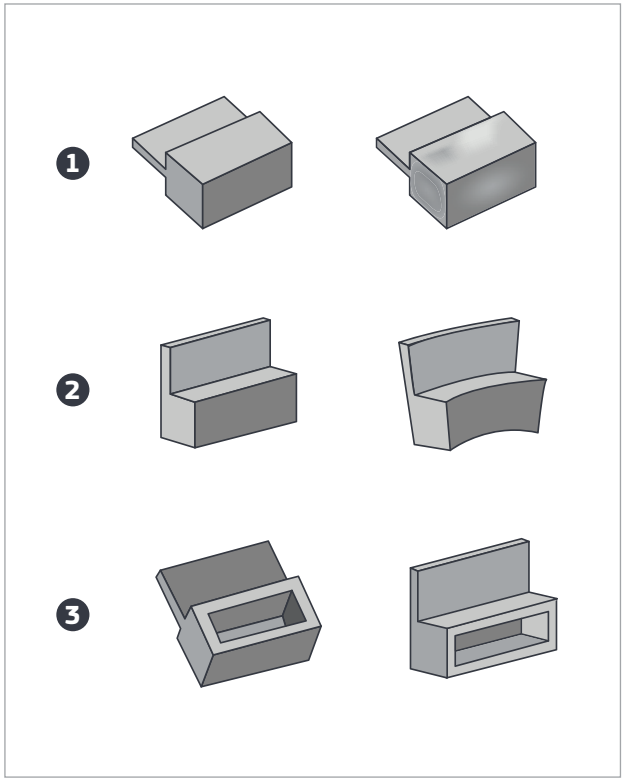

From left to right, **Figure 1** represents a part designed with thick features and the resulting sink once molded. **Figure 2** also shows a part designed with thick features, but this time the warp that occurs once molded. **Figure 3** demonstrates how coring out thick features helps create an optimally molded part.

Warp

Design a part with walls too thin for the target material and it's likely to curl up like a potato chip. This is called warp, and is easily avoided by following the same rules used with sink, namely staying within the general wall thickness guidelines. Ironically, the glass-filled materials that work well with sink-prone parts are more susceptible to warp. That's because, as the part cools, the glass fibers tend to line up in the same direction, creating internal stresses. Parts with internal support structures—gussets to support thin walls, or ribbing of large flat surfaces—fare best against warp.

Flash

Look closely at a rubber O-ring and you'll see a thin line of material at its outermost periphery. That's a parting line, the seam where the two halves of the mold come together. With free flowing materials such as Santoprene or unfilled nylon, a small amount of flash can sometimes ooze into the seam, and often requires trimming once the part has cooled. On a donut shape such as this, there's little choice over the parting-line location, but many orthogonal parts have sharp corners, which make a clean, crisp junction at which the mold can separate. Flash or no, you should expect a parting line on most molded products, but we will identify the parting line location on your ProtoQuote, and may suggest ways of modifying the part geometry to avoid one.

Swirling

From Honey Beige to Cornflower Blue, we stock more than 40 standard colorants. These are mixed with natural resin pellets immediately prior to the molding run and are usually quite close to the target color, but the final product may vary due to the polymer being used, texture and polish of the tool, and swirling during the mixing process. If you want an identical color match on your parts, it would be best to purchase color-matched, pre-compounded resin from an external vendor. We accept most customer-supplied resins sent our way.

Knit Lines

Worried about those fine lines that look like hairline cracks in your injection-molded part? Don't be. Those are knit lines, formed when two opposing flows of material join together in the mold cavity. Commonly seen at the edge of a hole or other cored feature, knit lines are—as a rule—purely cosmetic, but may create a physical failure point if present in an area of the part that receives substantial stress, such as the head of a screw. In this case, designing a strengthening boss feature around the hole is a good precaution, or just skip the hole entirely and drill it afterwards.

Surface Imperfections

If you select a PM-F0 non-cosmetic finish on a tool, the finished part will likely show small, circular, end-mill marks and tool transition lines. If you need a surface finish that's more cosmetically appealing, it's generally a simple, if more expensive matter to manually polish the tool. A PM-F1 finish removes most tool marks, while an SPI-A2 will be smoother than a fresh jar of peanut butter. Texturing via bead blasting is another option, which generally leaves a uniform matte finish, except in thicker areas, around knit lines, and in darker materials. Bear in mind that deep slots and cavities are difficult to reach for polishing and texturing, and that fine finishes may impact quick turnaround time because of the additional effort needed for polishing. We offer eight surface finish options to choose from for injection-molded parts.

Drag

Sufficient draft is an important part of any mold design, and quick-turn tooling is no exception. Vertical walls, meaning those part surfaces parallel to the direction of mold operation, should have a minimum draft angle of 1/2 degree, and 2 degrees is even better; heavily textured surfaces may require 5 degrees or more. Without proper draft, part ejection becomes difficult if not impossible, and drag or scrape lines may occur.

Vestiges

Gate vestige is that small ugly spot at one end of the part left by removal of the gate after molding, usually with a side cutter or razor knife. It's an unavoidable fact of injection molding. The only thing, for the most part, that can be done to avoid it is orienting the part in the mold such that cosmetic surfaces are unaffected—when molding a Statue of Liberty replica, for example, the gate should be placed on the soles of Lady Liberty's feet. When submitting a design to Protolabs, always be sure to speak to a customer service engineer to be sure surfaces that require a vestige-free appearance can be accommodated. We may have options to change a gate style depending on the material and part geometry. It is much easier to do this during the review stages rather than after the mold design stages have begun.

Jets, Orange Peels, Etc.

There are several miscellaneous problems that can crop up with injection molding, several of which can be tied back to wall thicknesses that exceed general recommendations:

- Jetting, a wormlike swirl that appears near especially thick gate areas, is caused by temperature variations within the material flow.
- Similarly, a surface that looks like an orange peel can be caused by flow variations in the mold cavity, usually in thicker sections of the part.
- Silvery streaks and material flaking is known as splay, and can occur as a result of moist or degraded resin, but can also be caused by material shear due to higher than normal injector-screw speeds.
- Blush, a cloudy discoloration normally found near gate areas, can be caused by improper fill speeds, but proper part geometry and gate placement also play a factor.

Thankfully, most of these issues can be resolved through slight modifications to part design and/or selecting a different material. Difficult part geometries often require fine-tuning of the molding temperature, injection speed, hold times, or all three. Material selection also plays a big part with cosmetics. Two examples of this are polypropylene and HDPE, which tend to sink more than polybutylene or acetal, but flow better into small part details. It is possible to test different materials using the same mold, but unfortunately shrink factors may prevent parts from having dimensions that match the CAD. In some cases after testing multiple materials, a new mold may be required for further testing or production parts.

3 Key Design Elements for Rapid Overmolding

Injection molding is a common and cost-effective method for manufacturing parts. It's widely used for everything from medical devices and children's toys to household appliances and automobile parts, producing parts that are both strong and light, in many cases replacing machined or cast metal products.

Sometimes, however, injection-molded plastic parts need a little help. Low impact or vibration resistance, slippery surfaces, poor ergonomics, and cosmetic concerns are just a few of the reasons why a second molded part is often added as a grip, handle, cover, or sleeve.

Protolabs' rapid overmolding process can be used to add a second molded part, such as a grip, handle, or cover, to an existing part, as seen in this sample.

Chemical Bonding Compatibility

OVERMOLD MATERIAL	SUBSTRATE MATERIAL					
	ABS Lustran 433-904000	ABS/PC Cycoloy C2950-111	PC Lexan 940-701	PBT Valox 357-1001	PP Profax 6323	Nylon 66 Zytel 103 HSL NC010
TPU - Texin 983-000000	C	C	C	C	M	M
TPV - Santoprene 101-87	M	M	M	M	C	M
TPE - Santoprene 101-64	M	M	M	M	C	M
LSR - Elastosil 3003/30 A/B	-	-	M	M	-	M
TPC - Hytrel 3078	C	C	C	C	M	M

M = mechanical bond recommended
C = chemical bond

Some manufacturers choose to assemble these two different molded components together with glue, screws, or an interference fit, but this takes time and costs money, and may lead to less-than-desirable results. Fortunately, the process of rapid overmolding offers an alternative solution.

This design tip explores three important elements of rapid overmolding:

- Bonding
- Materials
- Principles

What is Rapid Overmolding?

This process uses a mechanical or chemical bond (and oftentimes both) to permanently marry two parts together. This sidesteps assembly hassles, simplifies product design, and can improve the characteristics of many injection-molded parts.

At Protolabs, it works by placing a previously molded part—the substrate—back into the press and injecting a second plastic or liquid silicone rubber (LSR) over, into, and around the original part. The two-shot process requires a pair of molds—one for the substrate, and one for the complete, overmolded product. It also needs a human to tend the machine, loading substrate parts and unloading completed products, a process known as "pick-and-place" overmolding.

What's next? Before embarking on any overmolding design project, several design considerations should be explored first:

- **Bonding.** A strong bond between the two materials is critical to overmolding.
- **Materials.** Substrate and overmold materials should be physically, chemically, and thermally compatible.
- **Principles.** Substrate and overmold materials should be physically, chemically, and thermally compatible.

Bonding

Let's start with bonding. In a perfectly overmolded part, the overlay is impossible to remove, and will tear before separating from the substrate, or even take some of the underlying material with it. The thermoplastics TPU and TPC, for example, form a strong chemical bond with ABS, polycarbonate, and PBT Valox (a type of polybutylene). Santoprene TPV, a tough but flexible "vulcanizate" widely used in weatherseal, food service, and wire and cable applications, is more restrictive, readily bonding to polypropylene but little else.

Achieving a high-level chemical bond isn't always possible, though, nor even necessary in many cases. Consider a molded electronics housing cover with an overmolded gasket made of a soft sealing material. Once the cover is locked in place, the gasket has nowhere to go. All that's needed is enough bond to hold the gasket to the substrate so it can't fall out or be misplaced during assembly. This is an excellent application for overmolding, by the way, since it eliminates the need for a stamped paper or rubber gasket that must then be manually glued in place.

In most cases, we recommend a mechanical interlock to augment or even replace a chemical bond. This can be achieved by placing an undercut in the substrate part, or a series of reverse-tapered or counterbored holes into which the overmolding material can flow, assuring a no-fail mechanism in all but the most demanding applications. If you're unsure how to add these features to your part design, contact one of our application specialists at 877-479-3680 or **customerservice@protolabs.com**.

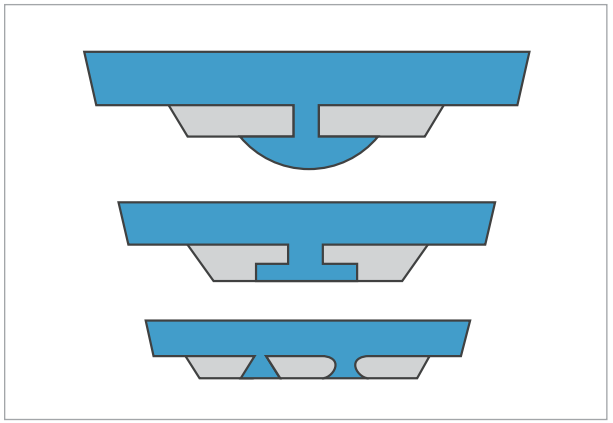

A mechanical interlock—as shown here—is strongly recommended if bonding is critical to your application. This can augment or even replace a chemical bond.

Maximizing Material Choices

There are many reasons to overmold. One of the most common is improve a product's grip while retaining its physical strength—the handle on a power tool, for example, or a non-slip grip for a surgical instrument. In this case, TPU over ABS is an excellent choice. Aesthetics and product branding are also readily achieved with overmolding—a sports franchise might use the team colors in two-piece overmolded mouth guards for its players, while a well-known tractor manufacturer could dress up its riding lawnmowers with green and yellow overmolded cowlings.

LSR is another popular injection molding material. It offers excellent tensile and tear strength, is hydrophobic (repels water), flexible, bacteria and UV-light resistant, and biocompatible. About the only downside to LSR—at least in an overmolding situation&mdsh;is its relatively high molding temperature of 350 degrees F (177 C), hot enough to soften substrate materials such as ABS, polyethylene, and others. Fortunately, polybutylene terephthalate (PBT) and glass-filled nylon hold up just fine.

At Protolabs, we offer more than 100 engineering-grade thermoplastic and liquid silicone rubber materials, and dozens of colorants.

Following the Rules

Overmolding reads from the same playbook as traditional injection molding processes, with a few additional idiosyncrasies:

- Proper draft angles, uniform wall thickness, and smooth transition lines must be maintained in both parts.
- The thickness of the overmold material should be less than or equal to that of the substrate below it.
- The melting temperature of the overmolding material should be less than that of the substrate (as in our LSR example).
- If chemical bonding isn't practical, don't despair. Mechanical interlocks are a great way to "hold it all together," and should be used wherever possible.
- Texturing of the substrate workpiece may help with adhesion. Texturing of the overmolded part may provide a better grip and more attractive surface.
- The surface of the overmolded part should be even with or slightly below any adjacent substrate surfaces.

Overmolding is a great way to improve your product's physical attributes or enhance its appearance. As with our other injection molding services, we produce cost-effective tooling with production quantities of 25 to 10,000 or more in about 15 days. If you're looking to make millions of parts, rapid overmolding is also a great way to test prototypes for bonding and material compatibility prior to investment in two-shot production molds, or to serve as bridge tools until those molds are ready.

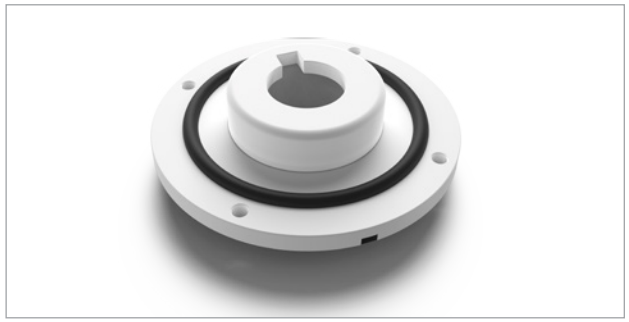

Overmolding is regularly used to create durable gaskets for industries like automotive and health care.

Because rapid overmolding is more complex than standard injection molding, the upfront tooling costs might be slightly higher than the sum of two molded and assembled components. Any additional investment is quickly absorbed, however, by the elimination of secondary assembly costs, as well as a higher quality, more durable product.

14 Reasons Why Optical LSR is Good for Lighting Applications

The history of plastic is all about replacing other materials, beginning with ivory and tortoiseshell back in the late 19th century. Today, as LEDs increasingly supplant metal filaments in light bulbs, optical liquid silicone rubber (LSR)—in addition to plastics like polycarbonate and acrylic resins—is replacing glass in many optical applications including lens covers and light pipes.

Since Edison's time, glass has seemed like the ideal shell for lightbulbs. It is almost perfectly transparent, inexpensive, has a defined manufacturing process, and is more or less impervious to the considerable heat generated as a wasteful byproduct of incandescent light.

Optical LSR is a transparent, flexible thermoset material that is replacing glass in many optical applications.

Heat loss, or wasted electricity, is the very reason incandescent bulbs are dying. And that same heat is why they have to be regularly replaced. LEDs on the other hand, while somewhat more expensive to produce at this time, more than make up for their initial cost with energy efficiency and long life. While glass could be used to enclose, cover or direct them, optical LSR is a better choice in almost every way. Here's why:

- Optical LSR is almost as transparent as the best glass across both visible and UV spectra.
- It does not discolor or lose transparency with age or with exposure to heat or UV.
- It is significantly lighter than glass and most other plastics.
- LSR is far more flexible than glass, reducing the chance of breakage. While flexible enough not to break, it is significantly stiffer than the LSR that is used in floppy bakeware. That material has a durometer (hardness) of 40 to 50, while optical LSR has a durometer of 70. (For comparison, the heel of a shoe typically has a durometer of about 80.) The stiffness of optical LSR is particularly valuable in applications like vehicle lenses where lights can be exposed to a variety of vibrations and blows.
- The material is also scratch and crack resistant, which helps preserve both its physical integrity and optical properties. You could cut a part made of optical LSR with a razor, but if you were to drag it across the ground or other rough surface it would most likely conform to the surface as it was dragged and not be marred.
- LSR is optically and mechanically stable at temperatures up to 150°C, which is important since LEDs do generate heat, though far less than an incandescent filament.
- Its wide operating temperature range, UV stability and flexibility make LSR ideal for outdoor applications.
- Flexibility of the material also allows designers and engineers the opportunity to combine a lens with a seal to reduce assembly cost, inventory control, and seams in the assembly.
- In its liquid state, optical LSR can be mixed with colorants or phosphors to extend its lighting capabilities (not available at Protolabs, yet).
- LSR molding is an optimized process that uses less manufacturing space and energy than a glass manufacturing facility, which allows for prototype and low-volume production runs.

In addition to its performance-enhancing characteristics, optical LSR has several positive traits that simplify design and molding.

- Its low viscosity allows easy flow within a mold, so the material can move readily through thin areas and fill small voids. This gives the designer greater freedom when creating fine features for function or cosmetics. It allows molding of thinner walls than could normally be produced in other resins. **Note:** Low viscosity also increases the likelihood of flash where mold halves meet. Chances of flash can be reduced by designing parts that can have clean, flat parting lines.

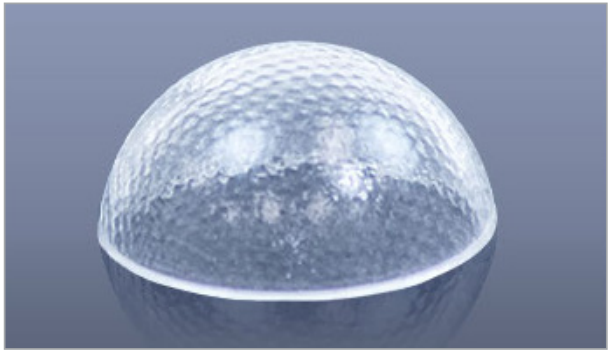

Its high operating temperature range, UV stability and flexibility make optical LSR ideal for outdoor applications.

- The material cools without creating significant sink or internal stresses, and its dimensional stability allows accurate production of lenses. Reduced likelihood of sink also permits designs with thicker walls than would be acceptable in other resins.

- The material can be molded within a polished mold without the use of secondary polishing processes required to polish individual parts, saving time and money in production. Some tooling can support optical surface geometry and finishes.

- Due to the material's somewhat rubbery consistency, shapes with small undercuts and negative draft that would be unacceptable in a more rigid material may be able to be safely unmolded. These can be treated as bump-offs or pickouts.

Finally, there are issues of mold design—gate and ejector placement—that impact a part's final appearance. Protolabs designers will work to minimize the afore-mentioned problems, but nearly all molds require gates and ejectors, and these will leave their marks on the finished parts. If this could be a problem, you should bring it to the attention of our engineers before your order is finalized.

To recap, optical LSR is a thermosetting material that is ideal for many optical applications. It is second in clarity only to glass. It can withstand heat in proximity to high-output LEDs and operate in a range of ambient temperatures. It is flexible enough for rough duty, outdoor, and automotive use. It allows for very flexible design including accurate replication of fine features. It can support minor undercuts and negative draft without the need for side-actions, and both thick and thin walls. Designs in this material can often integrate multiple parts into a single unit, combining for example a lens, a clear lens cover and a sealing gasket, reducing the bill of materials for a final assembly. Protolabs stocks Dow Corning MS-1002 LSR, a material that has been engineered for molding finely detailed parts for LED applications.

5 Design Considerations to Improve Multi-Cavity Molds

Moving from a single cavity mold to one that produces two, four, or eight parts at once seems like an easy way to increase production volume and reduce part costs. This can be true in many cases, but only if the right steps are taken and the requisite homework done first. Designing a part for multi-cavity molding is not as simple as copying the CAD file for a single-cavity mold multiple times.

The physics encountered when forcing molten plastic through a mold's sprues, runners, and gates change as molds become larger and more complex, something that can impact molding performance and part quality. Also, thermal variations within a multi-cavity mold body become more of a concern, and plastic must travel longer distances to reach the finish line, both of which increase the risk of partially-filled cavities and sink as well as part deformation after ejection.

When moving from single- to multi-cavity tooling, it's important to recognize that parts that behave perfectly in single-cavity mold might not play well with others, at least not without first making some tweaks to the part, the process, or even the material.

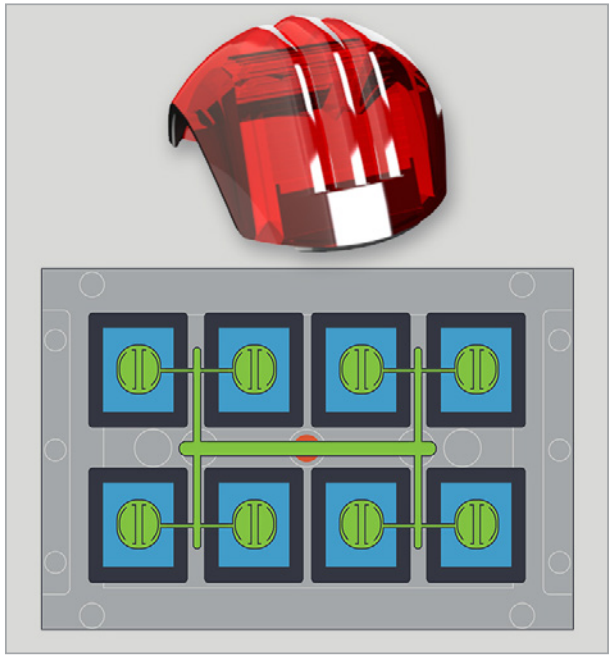

This eight-cavity mold is used for a higher volume of parts (finished part is pictured above the mold illustration).

Hold the Gate

One of these tweaks is the gate. Cattle gates, child gates, Gate E24 at the airport—each is designed to control traffic. The gates used in plastic injection molding are no different. They allow molten plastic to flow into the mold at the beginning of the injection cycle, and then hold it under pressure until the mold cools, the plastic has solidified and the part is subsequently ejected.

In moldmaking, there are more types of gates than there are players on a baseball team. Protolabs relies on three. Pin-style and hot tip gates are often employed on single-cavity molds to solve challenges with complex part geometries and to reduce gate vestige—the small remnant of runner material that must be trimmed from the finished workpiece—but these are rarely if ever used on multi-cavity molds. Here, tab gates (also known as edge gates) are the rule. Not only is gate placement far more flexible—something very important when trying to squeeze multiple parts into a mold—but the larger vestige that comes with tab gating works well to absorb residual flow stress around that section of the mold.

Another example where costly part redesign can be avoided when making the jump to multi-cavity is gate placement. Consider a mold for a plastic water bottle lid. Initial limited production expectations might dictate placement of the gate in a single-cavity mold gate at a certain mold location. But when production ramps up and the head of supply chain decides it's time to invest in a multi-cavity tool, the original gate location may be impossible to achieve due to the changes in part orientation required for multi-cavity molding. By discussing product expectations with Protolabs' customer service engineers early in the design cycle, hiccups like this can potentially be avoided.

Note that we also advise against designing your own runner and gate system to create your own multi-cavity tool—Protolabs can help facilitate the design of your multi-cavity mold.

Side-Actions and Pick-Outs

Similar situations can occur with a side-action. Let's say that you've designed a lightweight bobbin with holes like Swiss cheese running through each flange to reduce mass. This is a perfect use for side actions, which slide into place prior to the plastic entering the mold—thus restricting material flow—and pop back out before part ejection. While side-actions can work great for a single-cavity mold, this sewing machine accessory most likely wouldn't qualify for multi-cavity tooling due to that very requirement.

Manually loaded inserts, or pick-outs, should also be given careful consideration. Placing a small block of metal into a mold cavity to create a cutout on an internal feature, for example, is fairly straightforward in single-cavity molding. That same approach on an eight-cavity tool, however, is time-consuming, and should be avoided if large quantities are in your product's future. If this is the case, let us know and we'll help you design a more efficient mold from the start.

Family Style

Customers at Protolabs occasionally employ family molds for low-volume production needs. This type of mold is used to manufacture different components of a multi-part assembly, or multiple variations of a single component, in a single shot—if you've ever assembled a plastic model of a Ford Pinto as a kid (or a "Star Wars" TIE-Fighter replica as an adult), you've handled family-molded parts. If this is the approach you want to take for your project, be prepared for some additional work and a greater tooling investment.

Due to the different size and geometry of parts, family molds bring added design challenges, and it might make sense to investigate alternative molding options (e.g., multiple single-cavity tools) until larger production volumes warrant higher tooling costs. That said, Protolabs has successfully tackled many projects involving family molds, part geometry and family size permitting. Don't throw in the towel before giving us a shot.

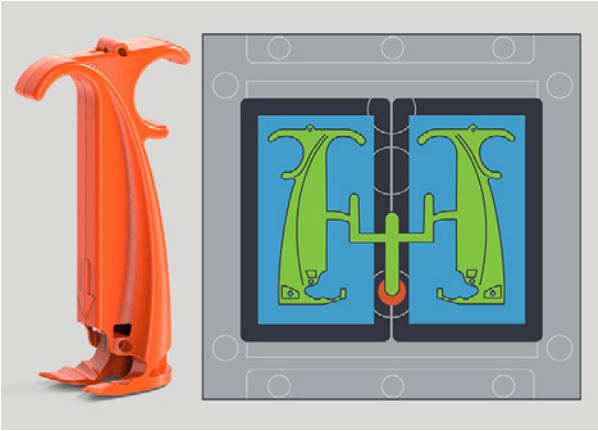

Designing symmetrical parts like a left- and right-hand side into a single mold can reduce piece-part costs.

Easy Flow

Materials that flow well, like liquid silicone rubber (LSR), are typically well-suited for a multi-cavity situation. Because silicone flows more easily than nickels at a Las Vegas casino, most of the challenges faced with multi-cavity and family molds are greatly reduced. If your project requires a flexible material with excellent strength and dimensional stability, good performance at extreme temperatures, chemical resistance and biocompatibility, LSR is a solid option.

For Your Consideration

In addition to the design elements unique to multi-cavity tooling, there of course are common injection molding guidelines to keep in mind like draft, wall thickness, material choice, and surface finish. The likelihood of success increases—especially as the number of cavities increases—with part designs that account for these variables and others. See our recent **Design Tip** on leveraging low-volume injection molding for a more thorough examination of design considerations for plastic injection molding.

The bottom line is this: Efficient injection-molded part design is about reducing part costs. This is true whether you're making 5,000 parts or 5,000,000. Some designers and manufacturers aim to shortcut the mold development cycle by jumping feet first into multi-cavity tooling, skipping the critical prototyping phase. Protolabs advises against this approach—not because we want to sell you another mold, but because testing parts using a single-cavity mold is an excellent way to vet design, improve quality, and likely save some money in the long run.

Some customers test multiple iterations of the same molded part in parallel with multiple single-cavity molds, select the winner, and then move into a multi-cavity mold. This can increase your overall speed to market by helping you avoid development speed bumps along the way.